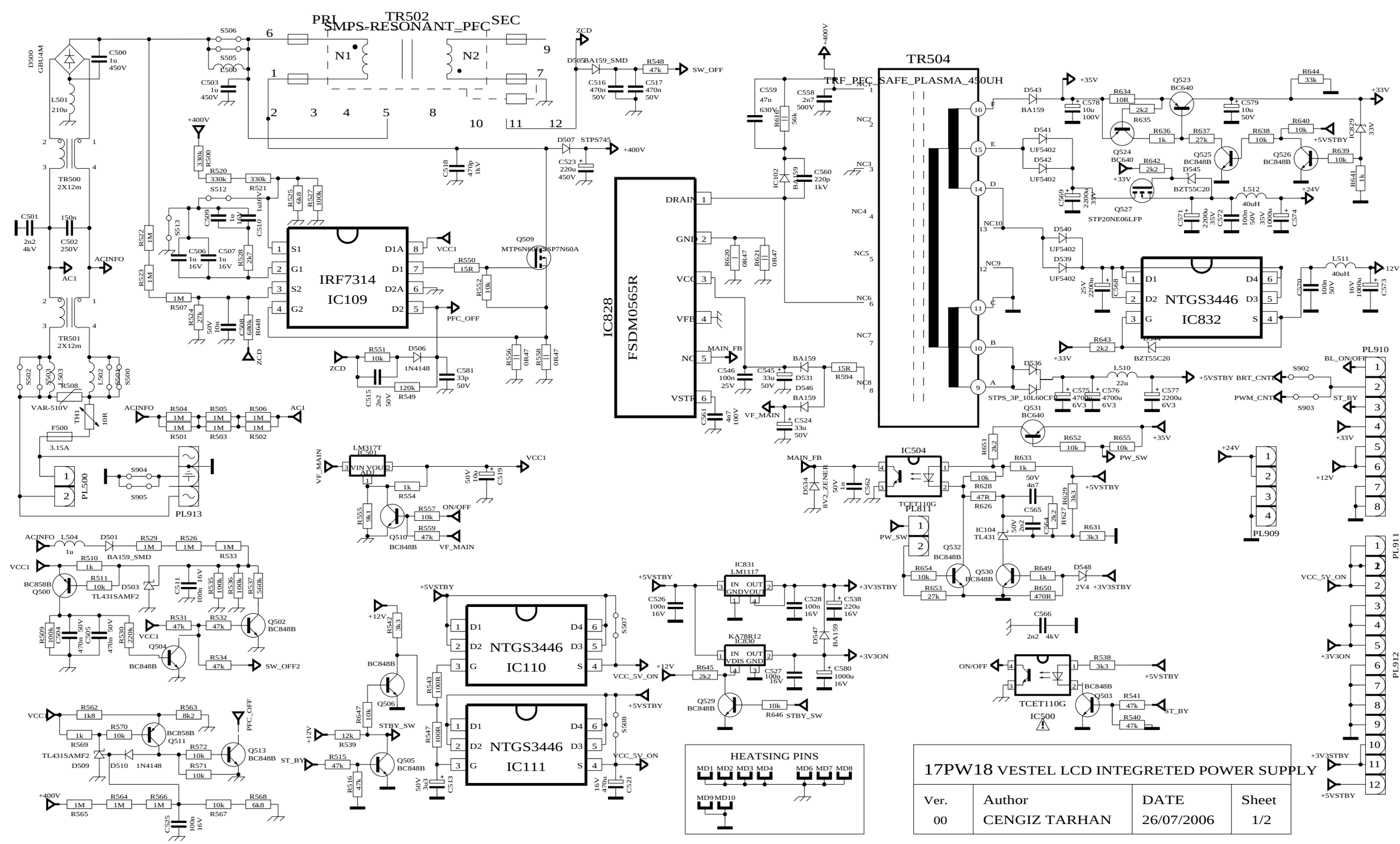

17PW18 VESTEL LCD INTEGRETED POWER SUPPLY			
Ver.	Author	DATE	Sheet
00	CENGIZ TARHAN	26/07/2006	1/2

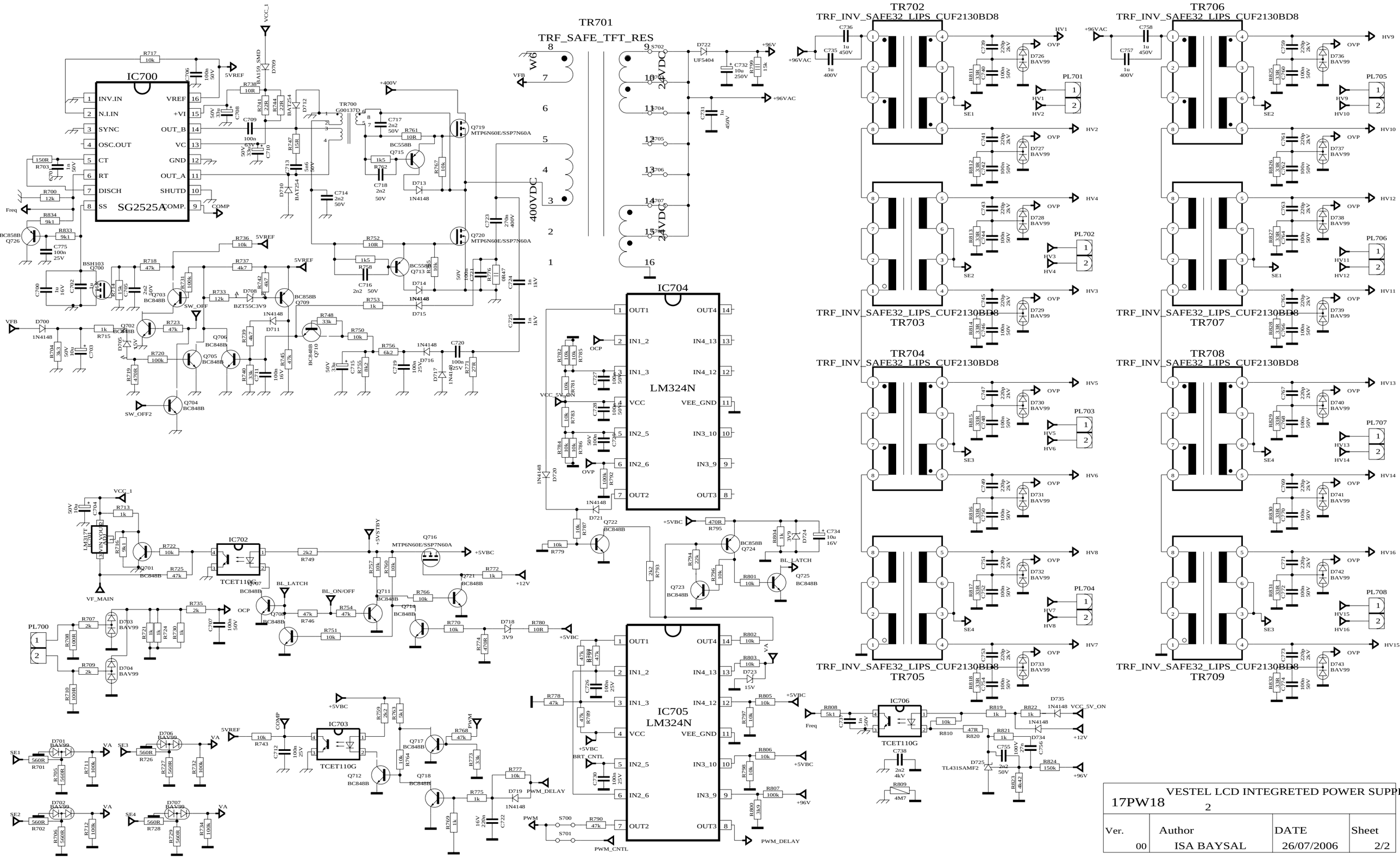

17PW18	VESTEL LCD INTEGRETED POWER SUPP 2		
Ver. 00	Author ISA BAYSAL	DATE 26/07/2006	Sheet 2/2